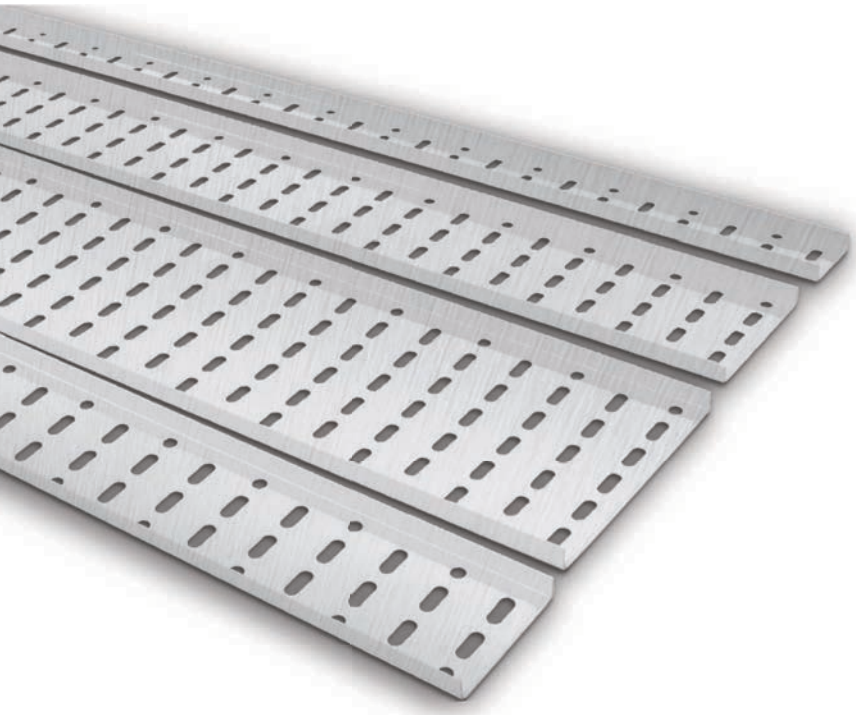

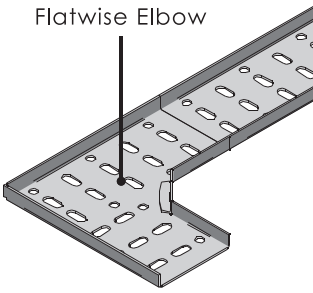

Perforated Cable Tray System

Cable tray is a unit or assembly of units or sections and associated fittings forming a rigid structural system used to securely fasten or support cables and raceways. Cable tray system is used to support insulated electrical cables used for power distribution, control, and communication. Cable trays are used as an alternative to open wiring or electrical conduit systems, and are commonly used for cable management in commercial and industrial construction. They are especially useful in situations where changes to a wiring system are anticipated, since new cables can be installed by laying them in the tray, instead of pulling them through a pipe.

Perforated Cable Tray Profile

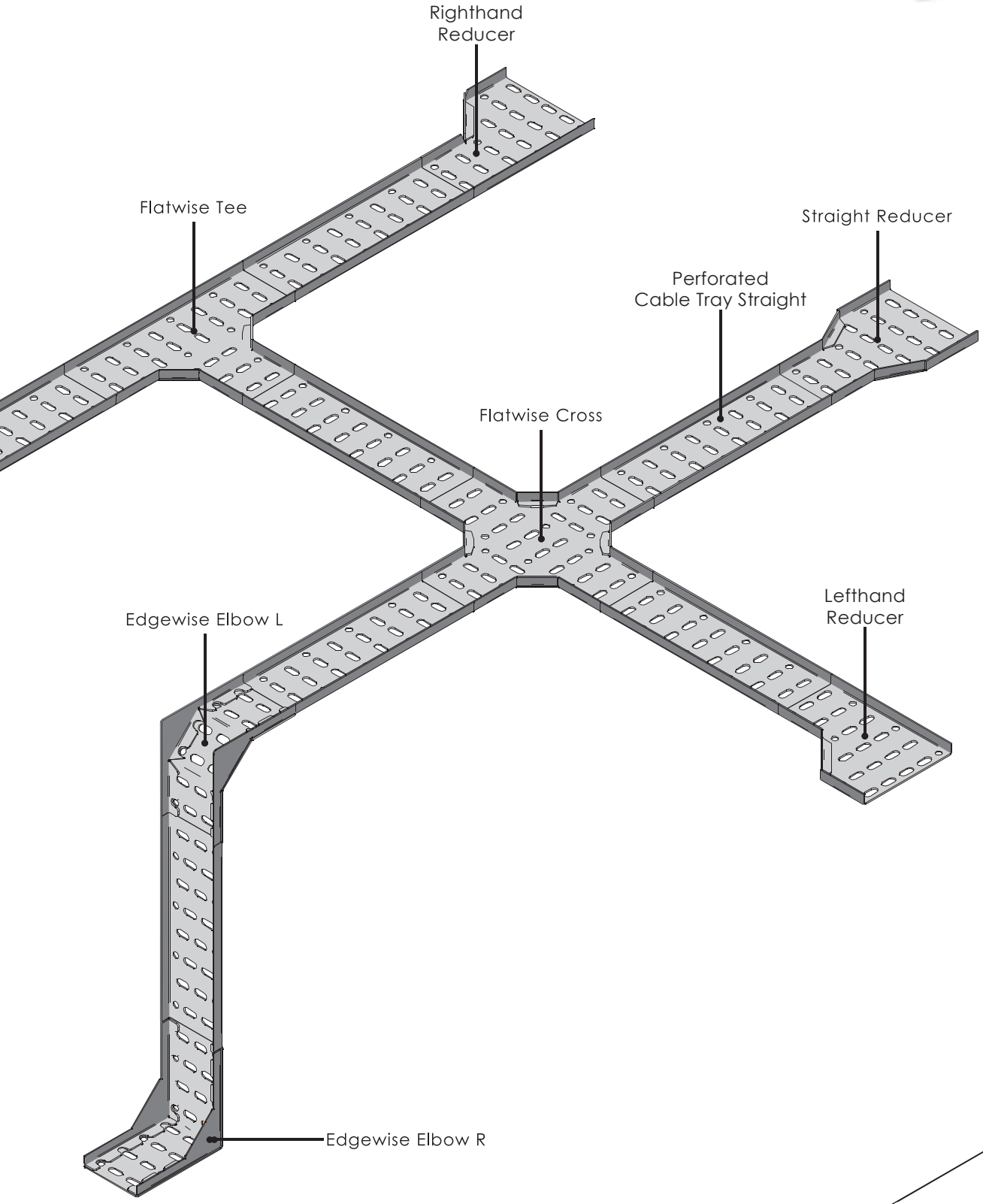

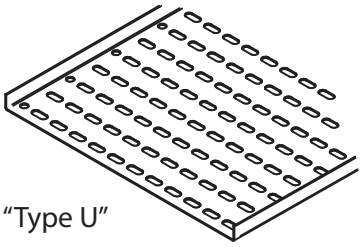

"Type U"

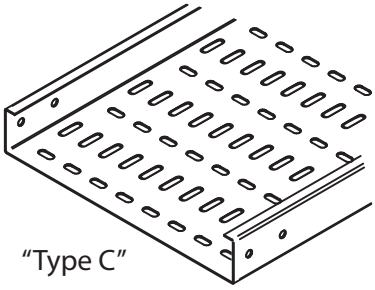

"Type C"
90 Degree / 45 Degree

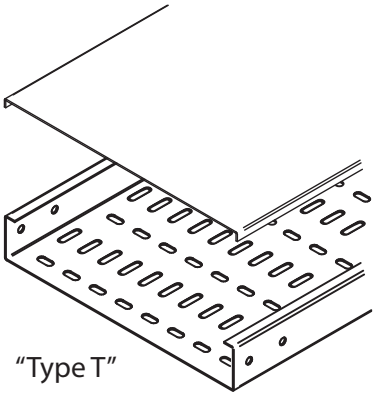

"Type T"

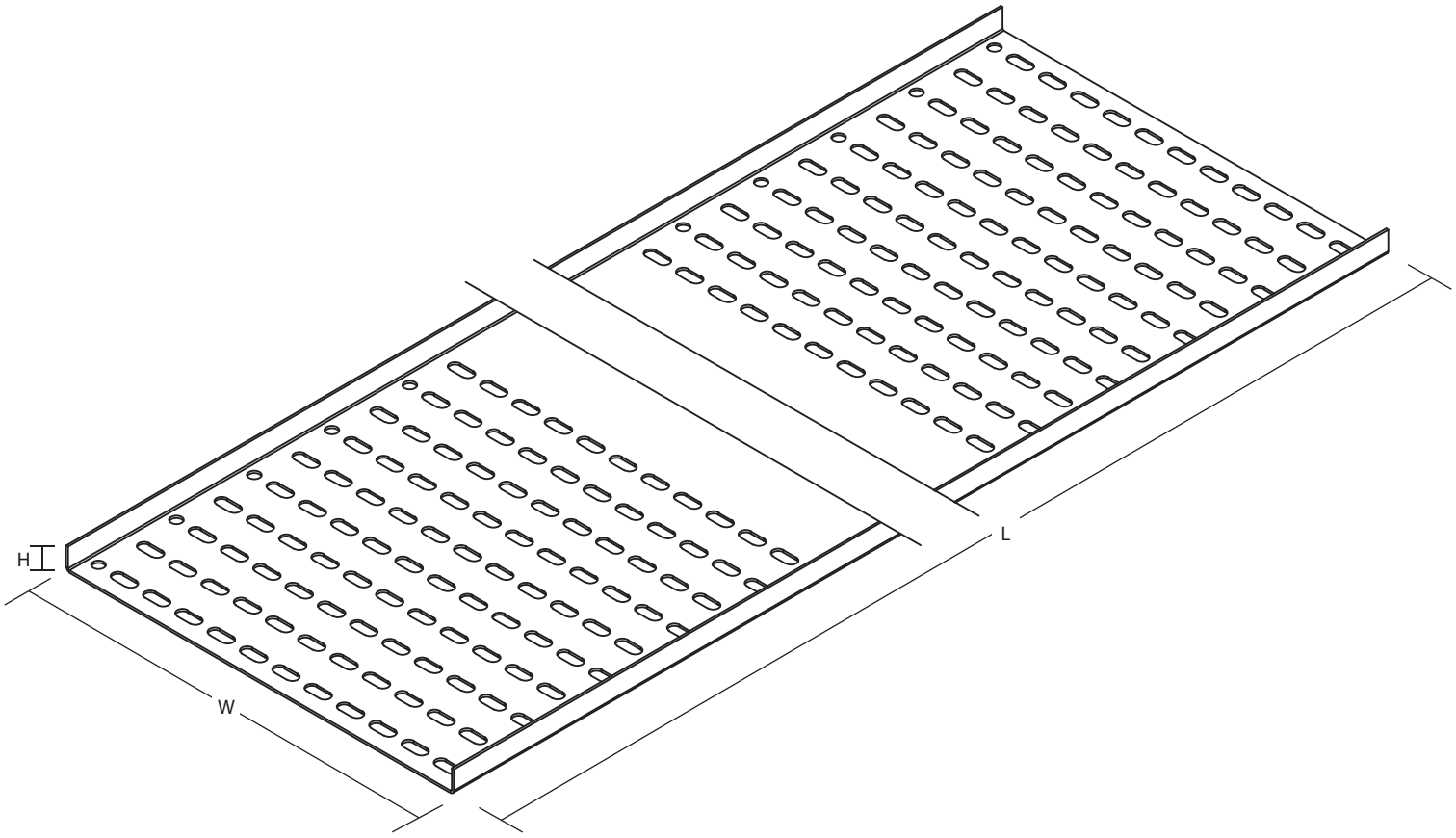

Dimension in Millimeter (mm)

L : Length
W : Width
H : Height

Perforated Cable Tray Straight "Type U"

Model	Nominal Size (mm)					
	Body (LxWxH)			Joint Plate (WxL)		Thickness
SCT/U-(50x13)	2438	50	13	43	150	1.5
SCT/U-(75x13)	2438	75	13	68	150	1.5
SCT/U-(100x13)	2438	100	13	93	150	1.5
SCT/U-(125x13)	2438	125	13	118	150	1.5
SCT/U-(150x13)	2438	150	13	143	150	1.5
SCT/U-(200x17)	2438	200	17	193	150	1.5
SCT/U-(250x17)	2438	250	17	243	150	1.5
SCT/U-(300x17)	2438	300	17	293	150	1.5
SCT/U-(350x20)	2438	350	20	342	150	2.0
SCT/U-(400x20)	2438	400	20	392	150	2.0
SCT/U-(450x20)	2438	450	20	442	150	2.0

**Specification subject to change without prior notice.
***Thickness Tolerance with + - 10%

*For order information, please refer page 63.

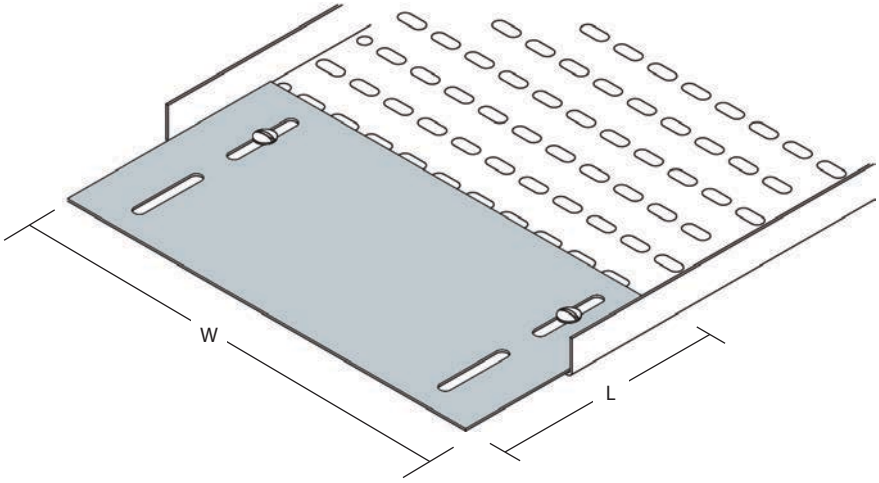

Joint Plate
*Separate purchase if need for tray joint plate

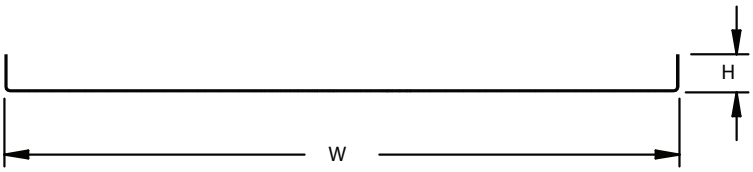

Dimension in Millimeter (mm)

L : Length
W : Width
H : Height

Perforated Cable Tray Straight "Type U"

Model	Nominal Size (mm)					
	Body (LxWxH)			Joint Plate (WxL)		Thickness
SCT/U-(500x25)	2438	500	25	492	150	2.0
SCT/U-(550x25)	2438	550	25	542	150	2.0
SCT/U-(600x25)	2438	600	25	592	150	2.0
SCT/U-(650x25)	2438	650	25	642	150	2.0
SCT/U-(700x25)	2438	700	25	692	150	2.0
SCT/U-(750x25)	2438	750	25	742	150	2.0
SCT/U-(800x25)	2438	800	25	792	150	2.0
SCT/U-(850x25)	2438	850	25	842	150	2.0
SCT/U-(900x25)	2438	900	25	892	150	2.0
SCT/U-(950x25)	2438	950	25	942	150	2.0
SCT/U-(1000x25)	2438	1000	25	992	150	2.0

**Specification subject to change without prior notice.
***Thickness Tolerance with + - 10%

*For order information, please refer page 63.

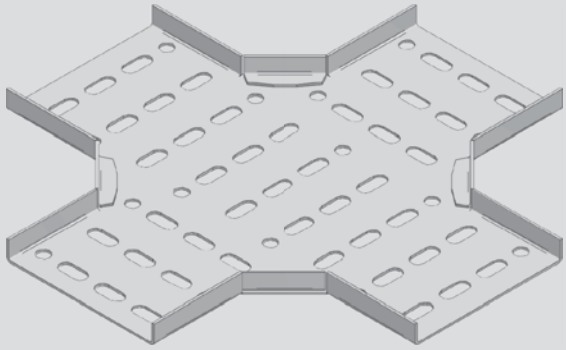

◄ **Flatwise Equal/Unequal Cross**
SCT/U AC-1

Flatwise Equal/Unequal Tee ►
SCT/U AC-2

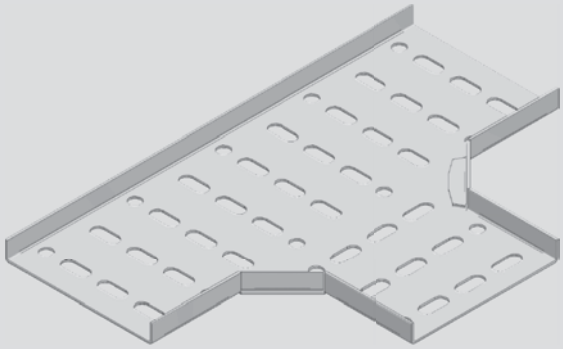

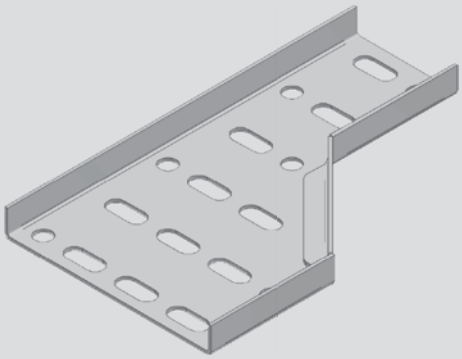

◄ **Righthand Reducer**
SCT/U AC-3

Lefthand Reducer ►
SCT/U AC-4

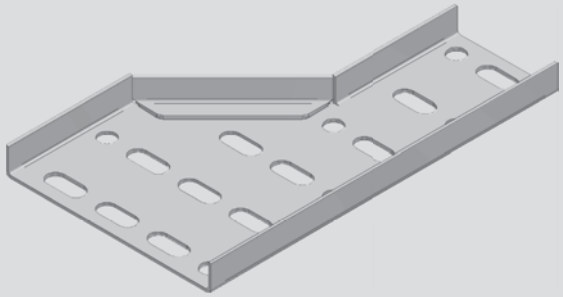

Type U

**Other design and sizes are available upon request.

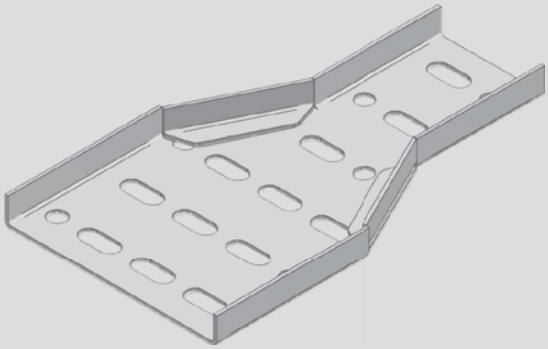

◄ **Straight Reducer**
SCT/U AC-5

Flatwise Elbow ►
SCT/U AC-6

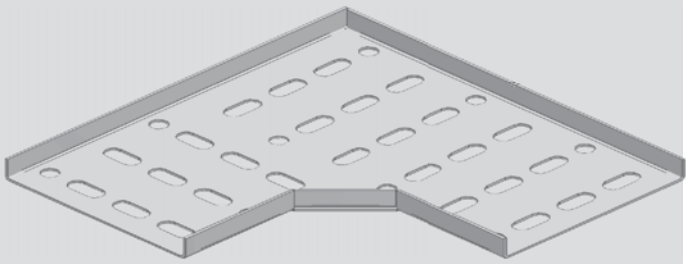

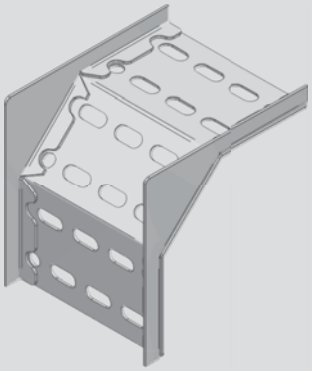

◄ **Edgewise Elbow Left**
SCT/U AC-7

Edgewise Elbow ►
Right SCT/U AC-8

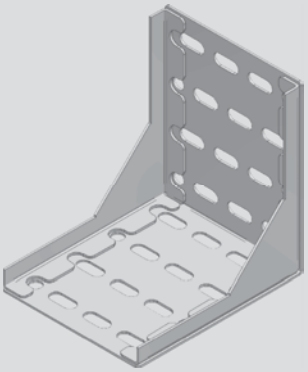

Type U

**Other design and sizes are available upon request.

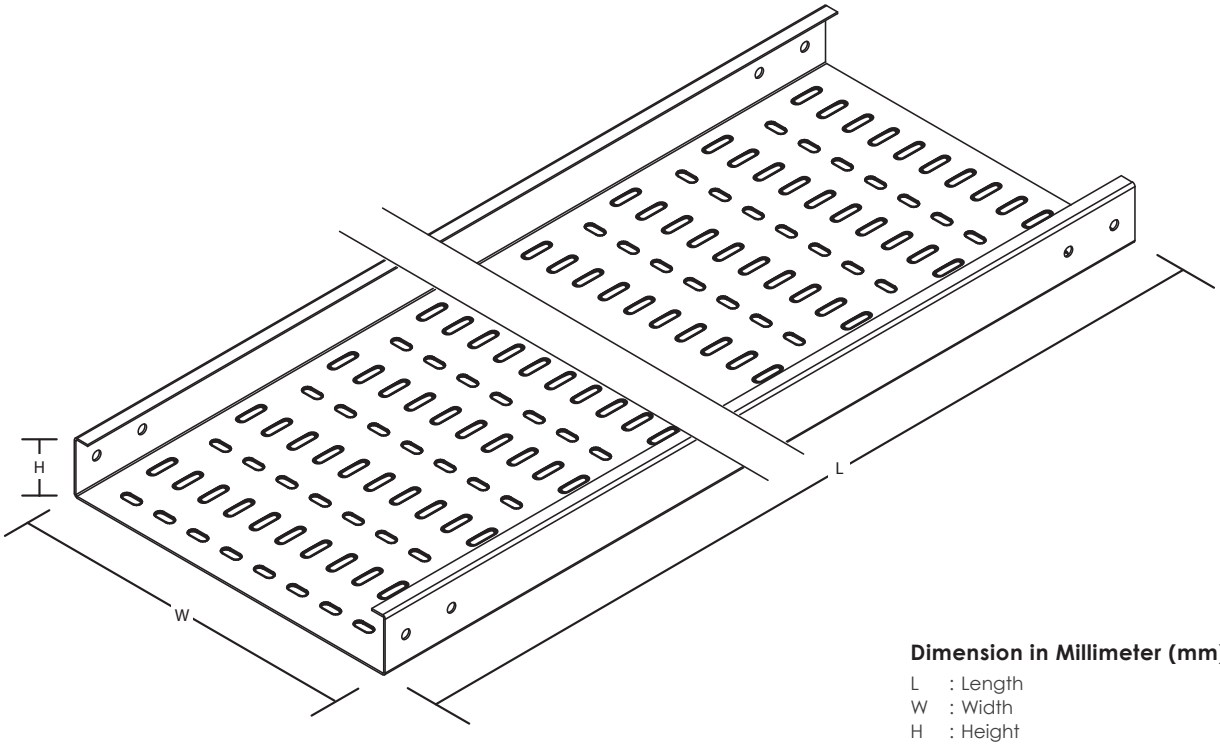

Dimension in Millimeter (mm)

L : Length
W : Width
H : Height

Perforated Cable Tray Straight "Type C" - 90 Degree (90D)

Model	Nominal Size (mm)		
	Body (LxWxH)	Splice Plate (H)	Thickness
SCT/C-(50X50)(90D)	2438 / 3000 x 50 x 50	42	1.5
SCT/C-(75X50)(90D)	2438 / 3000 x 75 x 50	42	1.5
SCT/C-(100X50)(90D)	2438 / 3000 x 100 x 50	42	1.5
SCT/C-(150X50)(90D)	2438 / 3000 x 150 x 50	42	1.5
SCT/C-(200X50)(90D)	2438 / 3000 x 200 x 50	42	1.5
SCT/C-(250X50)(90D)	2438 / 3000 x 250 x 50	42	1.5
SCT/C-(300X50)(90D)	2438 / 3000 x 300 x 50	42	1.5
SCT/C-(350X50)(90D)	2438 / 3000 x 350 x 50	42	2.0
SCT/C-(400X50)(90D)	2438 / 3000 x 400 x 50	42	2.0
SCT/C-(450X50)(90D)	2438 / 3000 x 450 x 50	42	2.0
SCT/C-(500X50)(90D)	2438 / 3000 x 500 x 50	42	2.0
SCT/C-(550X50)(90D)	2438 / 3000 x 550 x 50	42	2.0
SCT/C-(600X50)(90D)	2438 / 3000 x 600 x 50	42	2.0
SCT/C-(650X50)(90D)	2438 / 3000 x 650 x 50	42	2.0
SCT/C-(700X50)(90D)	2438 / 3000 x 700 x 50	42	2.0
SCT/C-(750X50)(90D)	2438 / 3000 x 750 x 50	42	2.0
SCT/C-(800X50)(90D)	2438 / 3000 x 800 x 50	42	2.0
SCT/C-(850X50)(90D)	2438 / 3000 x 850 x 50	42	2.0
SCT/C-(900X50)(90D)	2438 / 3000 x 900 x 50	42	2.0
SCT/C-(950X50)(90D)	2438 / 3000 x 950 x 50	42	2.0
SCT/C-(1000X50)(90D)	2438 / 3000 x 1000 x 50	42	2.0
SCT/C-(75X75)(90D)	2438 / 3000 x 75 x 75	67	1.5
SCT/C-(100X75)(90D)	2438 / 3000 x 100 x 75	67	1.5
SCT/C-(150X75)(90D)	2438 / 3000 x 150 x 75	67	1.5
SCT/C-(200X75)(90D)	2438 / 3000 x 200 x 75	67	1.5
SCT/C-(250X75)(90D)	2438 / 3000 x 250 x 75	67	1.5
SCT/C-(300X75)(90D)	2438 / 3000 x 300 x 75	67	1.5
SCT/C-(350X75)(90D)	2438 / 3000 x 350 x 75	67	2.0
SCT/C-(400X75)(90D)	2438 / 3000 x 400 x 75	67	2.0
SCT/C-(450X75)(90D)	2438 / 3000 x 450 x 75	67	2.0

**Specification subject to change without prior notice.
***Thickness Tolerance with + - 10%

*For order information, please refer page 63.

Perforated Cable Tray System

Perforated Cable Tray Straight "Type C" 90 Degree (90D)

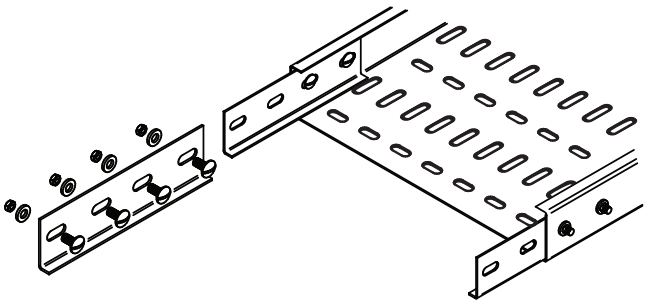

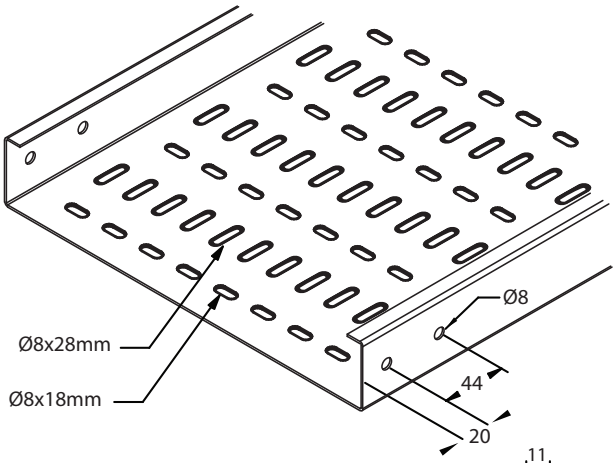

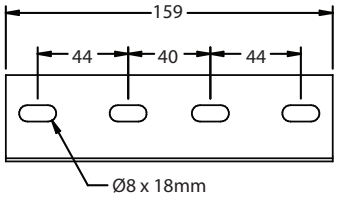

Splice Plate

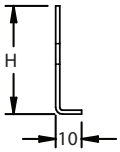

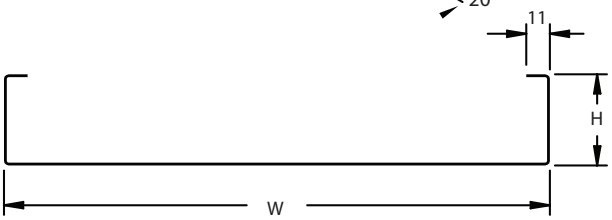

Perforated Cable Tray Straight "Type C" - 90 Degree (90D)

Model	Nominal Size (mm)		
	Body (LxWxH)	Splice Plate (H)	Thickness
SCT/C-(500X75)(90D)	2438 / 3000 x 500 x 75	67	2.0
SCT/C-(550X75)(90D)	2438 / 3000 x 550 x 75	67	2.0
SCT/C-(600X75)(90D)	2438 / 3000 x 600 x 75	67	2.0
SCT/C-(650X75)(90D)	2438 / 3000 x 650 x 75	67	2.0
SCT/C-(700X75)(90D)	2438 / 3000 x 700 x 75	67	2.0
SCT/C-(750X75)(90D)	2438 / 3000 x 750 x 75	67	2.0
SCT/C-(800X75)(90D)	2438 / 3000 x 800 x 75	67	2.0
SCT/C-(850X75)(90D)	2438 / 3000 x 850 x 75	67	2.0
SCT/C-(900X75)(90D)	2438 / 3000 x 900 x 75	67	2.0
SCT/C-(950X75)(90D)	2438 / 3000 x 950 x 75	67	2.0
SCT/C-(1000X75)(90D)	2438 / 3000 x 1000 x 75	67	2.0
SCT/C-(100X100)(90D)	2438 / 3000 x 100 x 100	92	1.5
SCT/C-(150X100)(90D)	2438 / 3000 x 150 x 100	92	1.5
SCT/C-(200X100)(90D)	2438 / 3000 x 200 x 100	92	1.5
SCT/C-(250X100)(90D)	2438 / 3000 x 250 x 100	92	1.5
SCT/C-(300X100)(90D)	2438 / 3000 x 300 x 100	92	1.5
SCT/C-(350X100)(90D)	2438 / 3000 x 350 x 100	92	2.0
SCT/C-(400X100)(90D)	2438 / 3000 x 400 x 100	92	2.0
SCT/C-(450X100)(90D)	2438 / 3000 x 450 x 100	92	2.0
SCT/C-(500X100)(90D)	2438 / 3000 x 500 x 100	92	2.0
SCT/C-(550X100)(90D)	2438 / 3000 x 550 x 100	92	2.0
SCT/C-(600X100)(90D)	2438 / 3000 x 600 x 100	92	2.0
SCT/C-(650X100)(90D)	2438 / 3000 x 650 x 100	92	2.0
SCT/C-(700X100)(90D)	2438 / 3000 x 700 x 100	92	2.0
SCT/C-(750X100)(90D)	2438 / 3000 x 750 x 100	92	2.0
SCT/C-(800X100)(90D)	2438 / 3000 x 800 x 100	92	2.0
SCT/C-(850X100)(90D)	2438 / 3000 x 850 x 100	92	2.0
SCT/C-(900X100)(90D)	2438 / 3000 x 900 x 100	92	2.0
SCT/C-(950X100)(90D)	2438 / 3000 x 950 x 100	92	2.0
SCT/C-(1000X100)(90D)	2438 / 3000 x 1000 x 100	92	2.0

**Specification subject to change without prior notice.
***Thickness Tolerance with + - 10%

*For order information, please refer page 63.

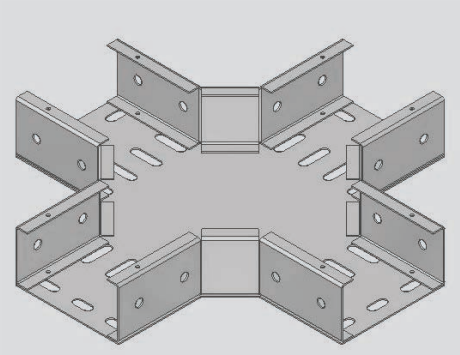

◄ Flatwise Equal/Unequal Cross
SCT/C (90D) AC-1

Flatwise Equal/Unequal Tee ►
SCT/C (90D) AC-2

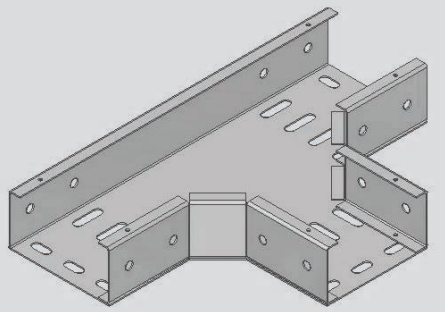

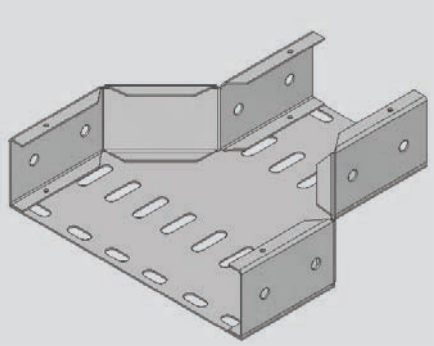

◄ Straight Reducer
SCT/C (90D) AC-5

Flatwise Elbow ►
SCT/C (90D) AC-6

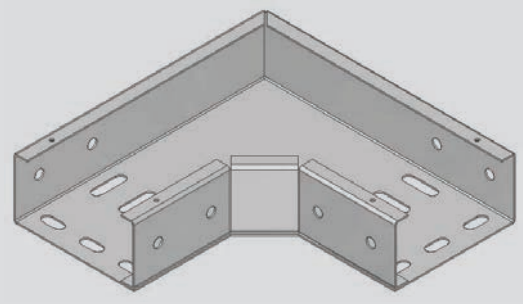

**Other design and sizes are available upon request.

"Type C" (90D)

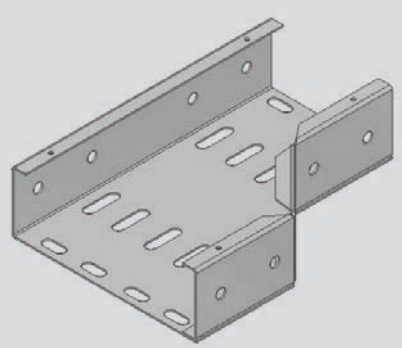

◄ **Righthand Reducer**
SCT/C (90D) AC-3

Lefthand Reducer ►
SCT/C (90D) AC-4

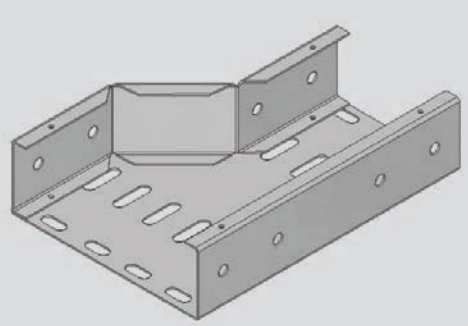

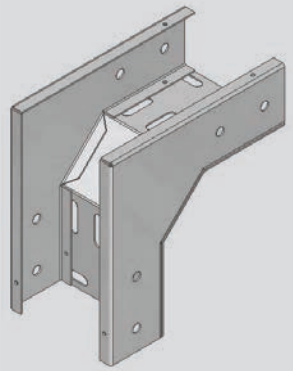

◄ **Edgewise Elbow Left**
SCT/C (90D) AC-7

Edgewise Elbow Right ►
SCT/C (90D) AC-8

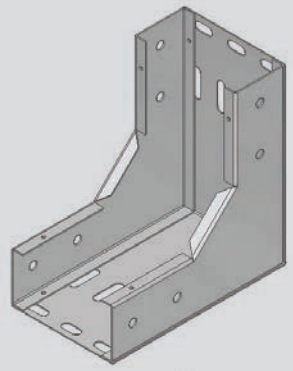

"Type C" (90D)

**Other design and sizes are available upon request.

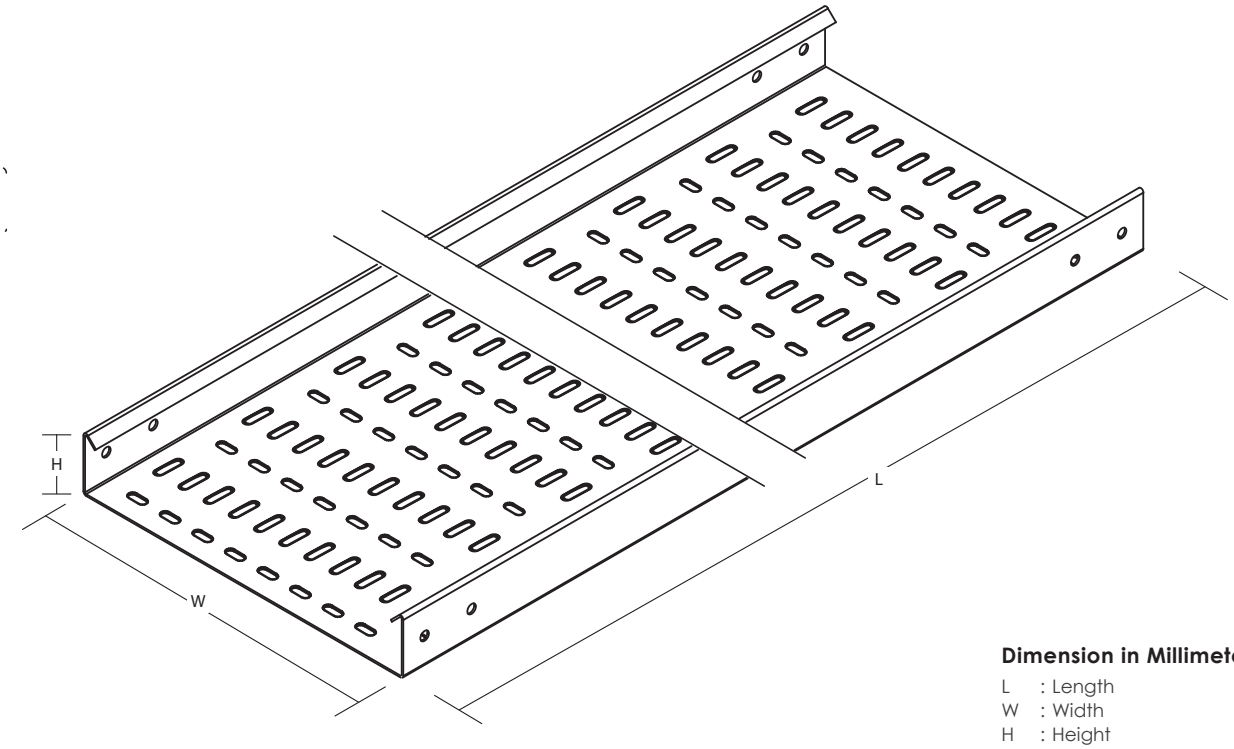

Dimension in Millimeter (mm)

L : Length
W : Width
H : Height

Perforated Cable Tray Straight "Type C" - 45 Degree (45D)

Model	Nominal Size (mm)		
	Body (LxWxH)	Splice Plate (H)	Thickness
SCT/C-(50X50)(45D)	2438 / 3000 x 50 x 50	42	1.5
SCT/C-(75X50)(45D)	2438 / 3000 x 75 x 50	42	1.5
SCT/C-(100X50)(45D)	2438 / 3000 x 100 x 50	42	1.5
SCT/C-(150X50)(45D)	2438 / 3000 x 150 x 50	42	1.5
SCT/C-(200X50)(45D)	2438 / 3000 x 200 x 50	42	1.5
SCT/C-(250X50)(45D)	2438 / 3000 x 250 x 50	42	1.5
SCT/C-(300X50)(45D)	2438 / 3000 x 300 x 50	42	1.5
SCT/C-(350X50)(45D)	2438 / 3000 x 350 x 50	42	2.0
SCT/C-(400X50)(45D)	2438 / 3000 x 400 x 50	42	2.0
SCT/C-(450X50)(45D)	2438 / 3000 x 450 x 50	42	2.0
SCT/C-(500X50)(45D)	2438 / 3000 x 500 x 50	42	2.0
SCT/C-(550X50)(45D)	2438 / 3000 x 550 x 50	42	2.0
SCT/C-(600X50)(45D)	2438 / 3000 x 600 x 50	42	2.0
SCT/C-(650X50)(45D)	2438 / 3000 x 650 x 50	42	2.0
SCT/C-(700X50)(45D)	2438 / 3000 x 700 x 50	42	2.0
SCT/C-(750X50)(45D)	2438 / 3000 x 750 x 50	42	2.0
SCT/C-(800X50)(45D)	2438 / 3000 x 800 x 50	42	2.0
SCT/C-(850X50)(45D)	2438 / 3000 x 850 x 50	42	2.0
SCT/C-(900X50)(45D)	2438 / 3000 x 900 x 50	42	2.0
SCT/C-(950X50)(45D)	2438 / 3000 x 950 x 50	42	2.0
SCT/C-(1000X50)(45D)	2438 / 3000 x 1000 x 50	42	2.0
SCT/C-(75X75)(45D)	2438 / 3000 x 75 x 75	67	1.5
SCT/C-(100X75)(45D)	2438 / 3000 x 100 x 75	67	1.5
SCT/C-(150X75)(45D)	2438 / 3000 x 150 x 75	67	1.5
SCT/C-(200X75)(45D)	2438 / 3000 x 200 x 75	67	1.5
SCT/C-(250X75)(45D)	2438 / 3000 x 250 x 75	67	1.5
SCT/C-(300X75)(45D)	2438 / 3000 x 300 x 75	67	1.5
SCT/C-(350X75)(45D)	2438 / 3000 x 350 x 75	67	2.0
SCT/C-(400X75)(45D)	2438 / 3000 x 400 x 75	67	2.0
SCT/C-(450X75)(45D)	2438 / 3000 x 450 x 75	67	2.0

**Specification subject to change without prior notice.
***Thickness Tolerance with + - 10%

*For order information, please refer page 63.

Perforated Cable Tray System

Perforated Cable Tray Straight "Type C" 45 Degree (45D)

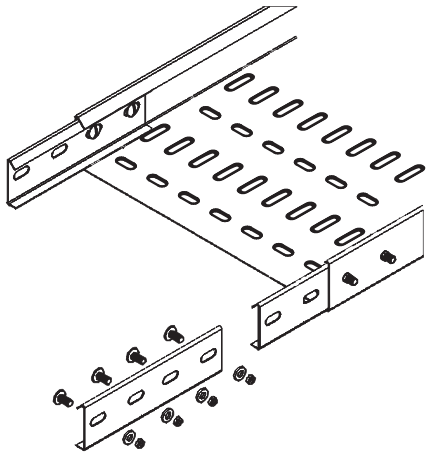

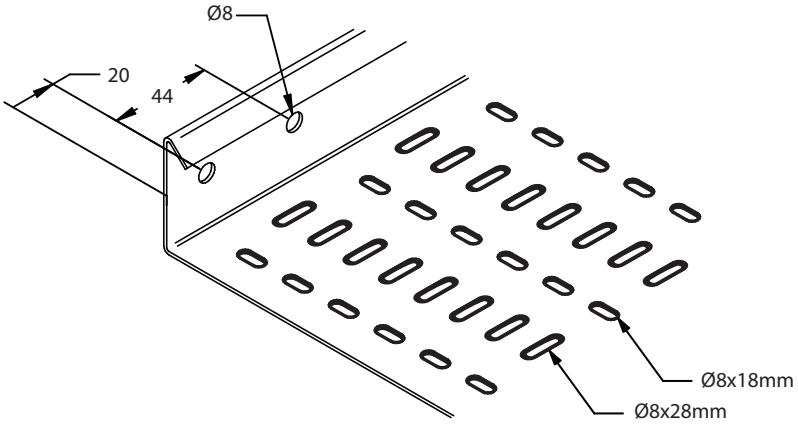

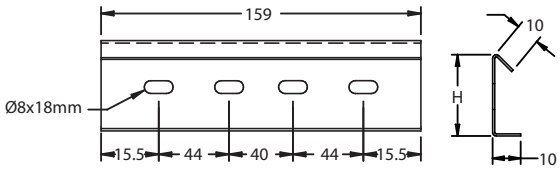

Splice Plate

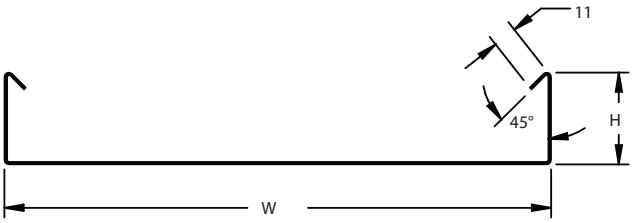

Perforated Cable Tray Straight "Type C" - 45 Degree (45D)

Model	Nominal Size (mm)		
	Body (LxWxH)	Splice Plate (H)	Thickness
SCT/C-(500X75)(45D)	2438 / 3000 x 500 x 75	67	2.0
SCT/C-(550X75)(45D)	2438 / 3000 x 550 x 75	67	2.0
SCT/C-(600X75)(45D)	2438 / 3000 x 600 x 75	67	2.0
SCT/C-(650X75)(45D)	2438 / 3000 x 650 x 75	67	2.0
SCT/C-(700X75)(45D)	2438 / 3000 x 700 x 75	67	2.0
SCT/C-(750X75)(45D)	2438 / 3000 x 750 x 75	67	2.0
SCT/C-(800X75)(45D)	2438 / 3000 x 800 x 75	67	2.0
SCT/C-(850X75)(45D)	2438 / 3000 x 850 x 75	67	2.0
SCT/C-(900X75)(45D)	2438 / 3000 x 900 x 75	67	2.0
SCT/C-(950X75)(45D)	2438 / 3000 x 950 x 75	67	2.0
SCT/C-(1000X75)(45D)	2438 / 3000 x 1000 x 75	67	2.0
SCT/C-(100X100)(45D)	2438 / 3000 x 100 x 100	92	1.5
SCT/C-(150X100)(45D)	2438 / 3000 x 150 x 100	92	1.5
SCT/C-(200X100)(45D)	2438 / 3000 x 200 x 100	92	1.5
SCT/C-(250X100)(45D)	2438 / 3000 x 250 x 100	92	1.5
SCT/C-(300X100)(45D)	2438 / 3000 x 300 x 100	92	1.5
SCT/C-(350X100)(45D)	2438 / 3000 x 350 x 100	92	2.0
SCT/C-(400X100)(45D)	2438 / 3000 x 400 x 100	92	2.0
SCT/C-(450X100)(45D)	2438 / 3000 x 450 x 100	92	2.0
SCT/C-(500X100)(45D)	2438 / 3000 x 500 x 100	92	2.0
SCT/C-(550X100)(45D)	2438 / 3000 x 550 x 100	92	2.0
SCT/C-(600X100)(45D)	2438 / 3000 x 600 x 100	92	2.0
SCT/C-(650X100)(45D)	2438 / 3000 x 650 x 100	92	2.0
SCT/C-(700X100)(45D)	2438 / 3000 x 700 x 100	92	2.0
SCT/C-(750X100)(45D)	2438 / 3000 x 750 x 100	92	2.0
SCT/C-(800X100)(45D)	2438 / 3000 x 800 x 100	92	2.0
SCT/C-(850X100)(45D)	2438 / 3000 x 850 x 100	92	2.0
SCT/C-(900X100)(45D)	2438 / 3000 x 900 x 100	92	2.0
SCT/C-(950X100)(45D)	2438 / 3000 x 950 x 100	92	2.0
SCT/C-(1000X100)(45D)	2438 / 3000 x 1000 x 100	92	2.0

**Specification subject to change without prior notice.
***Thickness Tolerance with + - 10%

*For order information, please refer page 63.

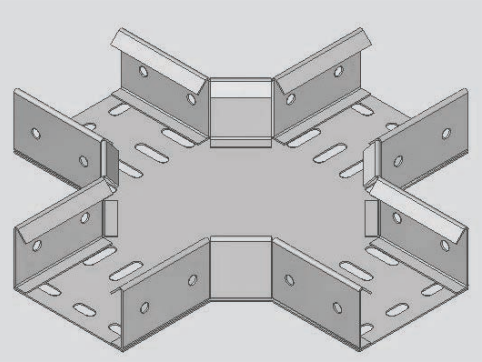

◄ **Flatwise Equal/Unequal Cross**
SCT/C (45D) AC-1

Flatwise Equal/Unequal Tee ►
SCT/C (45D) AC-2

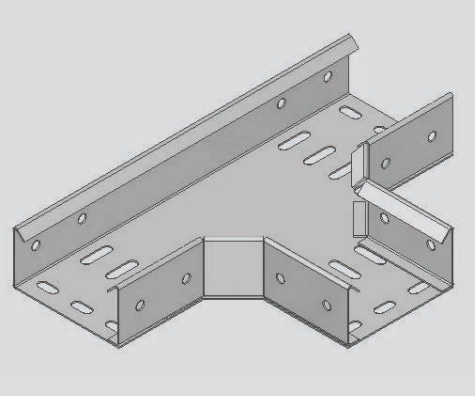

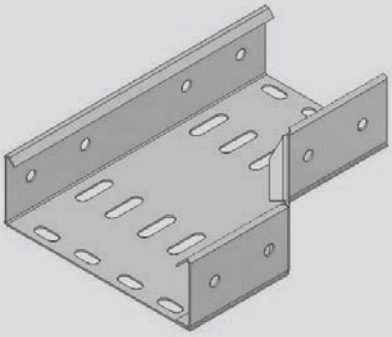

◄ **Righthand Reducer**
SCT/C (45D) AC-3

Lefthand Reducer ►
SCT/C (45D) AC-4

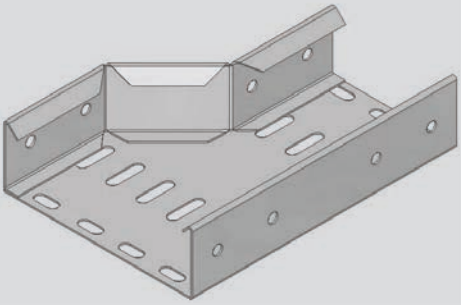

**Other design and sizes are available upon request.

"Type C" (45D)

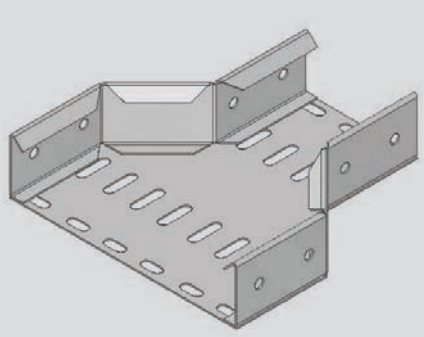

◄ **Straight Reducer**
SCT/C (45D) AC-5

Flatwise Elbow ►
SCT/C (45D) AC-6

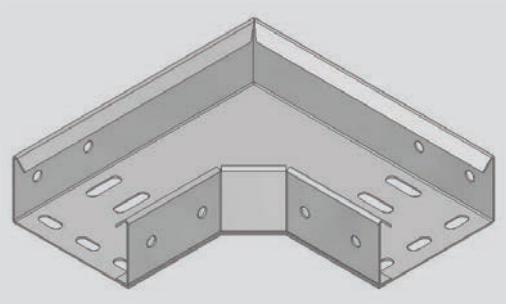

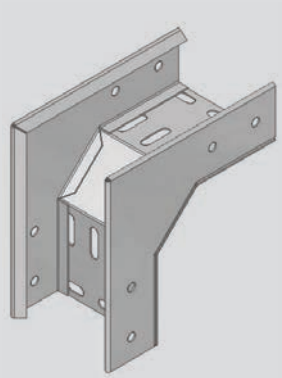

◄ **Edgewise Elbow Left**
SCT/C (45D) AC-7

Edgewise Elbow Right ►
SCT/C (45D) AC-8

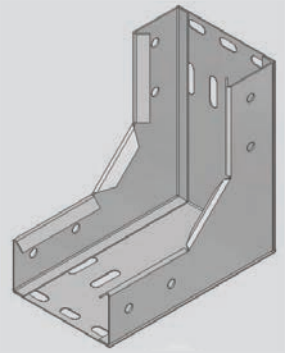

"Type C" (45D)

**Other design and sizes are available upon request.

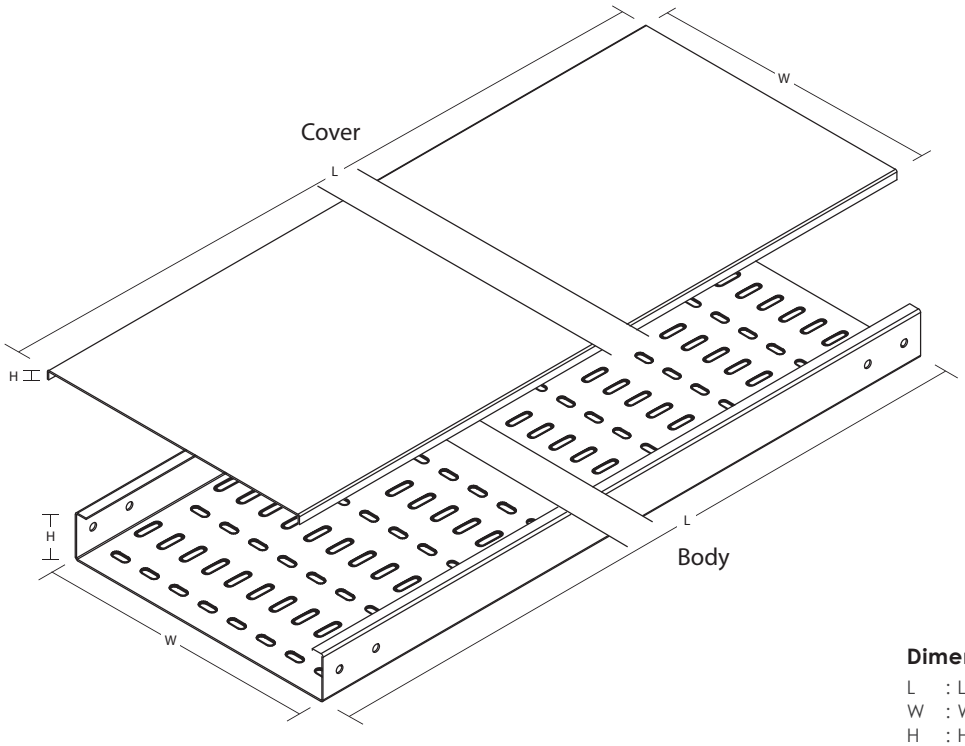

Optional

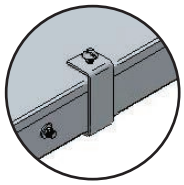

Cover Clip

Dimension in Millimeter (mm)

L : Length
W : Width
H : Height

Perforated Cable Tray Straight "Type T"

Model	Nominal Size (mm)			
	Body (LxWxH)	Cover (WxH)	Splice Plate (H)	Thickness
SCT/T-(50X50)	2438 / 3000 x 50 x 50	55 x 11	42	1.5
SCT/T-(75X50)	2438 / 3000 x 75 x 50	80 x 11	42	1.5
SCT/T-(100X50)	2438 / 3000 x 100 x 50	105 x 11	42	1.5
SCT/T-(150X50)	2438 / 3000 x 150 x 50	155 x 11	42	1.5
SCT/T-(200X50)	2438 / 3000 x 200 x 50	205 x 11	42	1.5
SCT/T-(250X50)	2438 / 3000 x 250 x 50	255 x 11	42	1.5
SCT/T-(300X50)	2438 / 3000 x 300 x 50	305 x 11	42	1.5
SCT/T-(350X50)	2438 / 3000 x 350 x 50	356 x 11	42	2.0
SCT/T-(400X50)	2438 / 3000 x 400 x 50	406 x 11	42	2.0
SCT/T-(450X50)	2438 / 3000 x 450 x 50	456 x 11	42	2.0
SCT/T-(500X50)	2438 / 3000 x 500 x 50	506 x 11	42	2.0
SCT/T-(550X50)	2438 / 3000 x 550 x 50	556 x 11	42	2.0
SCT/T-(600X50)	2438 / 3000 x 600 x 50	606 x 11	42	2.0
SCT/T-(650X50)	2438 / 3000 x 650 x 50	656 x 11	42	2.0
SCT/T-(700X50)	2438 / 3000 x 700 x 50	706 x 11	42	2.0
SCT/T-(750X50)	2438 / 3000 x 750 x 50	756 x 11	42	2.0
SCT/T-(800X50)	2438 / 3000 x 800 x 50	806 x 11	42	2.0
SCT/T-(850X50)	2438 / 3000 x 850 x 50	856 x 11	42	2.0
SCT/T-(900X50)	2438 / 3000 x 900 x 50	906 x 11	42	2.0
SCT/T-(950X50)	2438 / 3000 x 950 x 50	956 x 11	42	2.0
SCT/T-(1000X50)	2438 / 3000 x 1000 x 50	1006 x 11	42	2.0
SCT/T-(75X75)	2438 / 3000 x 75 x 75	80 x 11	67	1.5
SCT/T-(100X75)	2438 / 3000 x 100 x 75	105 x 11	67	1.5
SCT/T-(150X75)	2438 / 3000 x 150 x 75	155 x 11	67	1.5
SCT/T-(200X75)	2438 / 3000 x 200 x 75	205 x 11	67	1.5
SCT/T-(250X75)	2438 / 3000 x 250 x 75	255 x 11	67	1.5
SCT/T-(300X75)	2438 / 3000 x 300 x 75	305 x 11	67	1.5
SCT/T-(350X75)	2438 / 3000 x 350 x 75	356 x 11	67	2.0
SCT/T-(400X75)	2438 / 3000 x 400 x 75	406 x 11	67	2.0
SCT/T-(450X75)	2438 / 3000 x 450 x 75	456 x 11	67	2.0

**Specification subject to change without prior notice.
***Thickness Tolerance with + - 10%

*For order information, please refer page 63.

Perforated Cable Tray System

Cable Tray Straight "Type T"

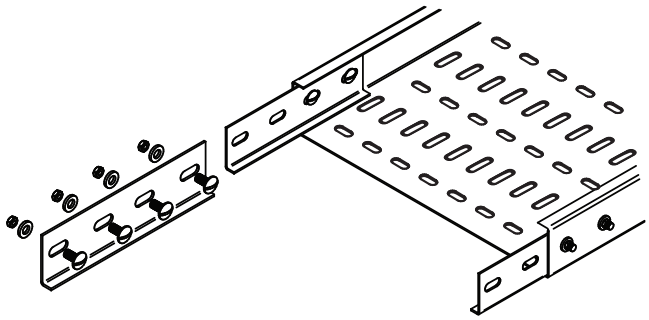

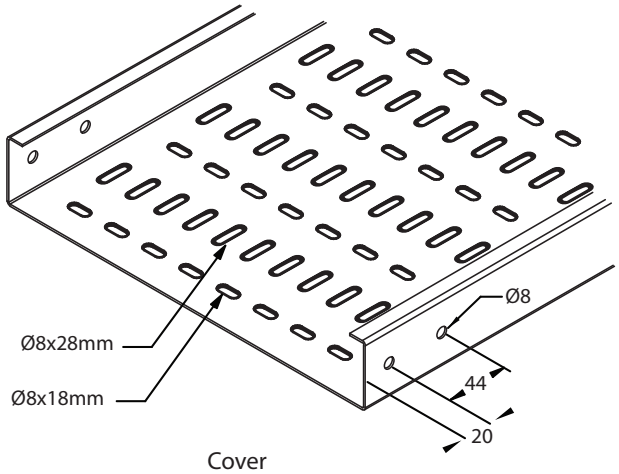

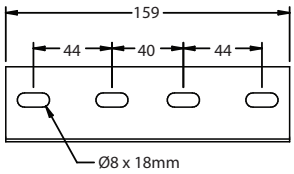

Splice Plate

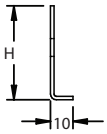

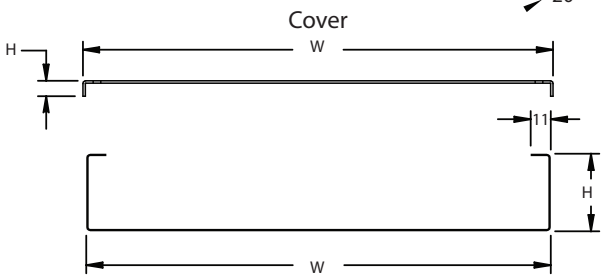

Perforated Cable Tray Straight "Type T"

Model	Nominal Size (mm)			
	Body (LxWxH)	Cover (WxH)	Splice Plate (H)	Thickness
SCT/T-(500X75)	2438 / 3000 x 500 x 75	506 x 11	67	2.0
SCT/T-(550X75)	2438 / 3000 x 550 x 75	556 x 11	67	2.0
SCT/T-(600X75)	2438 / 3000 x 600 x 75	606 x 11	67	2.0
SCT/T-(650X75)	2438 / 3000 x 650 x 75	656 x 11	67	2.0
SCT/T-(700X75)	2438 / 3000 x 700 x 75	706 x 11	67	2.0
SCT/T-(750X75)	2438 / 3000 x 750 x 75	756 x 11	67	2.0
SCT/T-(800X75)	2438 / 3000 x 800 x 75	806 x 11	67	2.0
SCT/T-(850X75)	2438 / 3000 x 850 x 75	856 x 11	67	2.0
SCT/T-(900X75)	2438 / 3000 x 900 x 75	906 x 11	67	2.0
SCT/T-(950X75)	2438 / 3000 x 950 x 75	956 x 11	67	2.0
SCT/T-(1000X75)	2438 / 3000 x 1000 x 75	1006 x 11	67	2.0
SCT/T-(100X100)	2438 / 3000 x 100 x 100	105 x 11	92	1.5
SCT/T-(150X100)	2438 / 3000 x 150 x 100	155 x 11	92	1.5
SCT/T-(200X100)	2438 / 3000 x 200 x 100	205 x 11	92	1.5
SCT/T-(250X100)	2438 / 3000 x 250 x 100	255 x 11	92	1.5
SCT/T-(300X100)	2438 / 3000 x 300 x 100	305 x 11	92	1.5
SCT/T-(350X100)	2438 / 3000 x 350 x 100	356 x 11	92	2.0
SCT/T-(400X100)	2438 / 3000 x 400 x 100	406 x 11	92	2.0
SCT/T-(450X100)	2438 / 3000 x 450 x 100	456 x 11	92	2.0
SCT/T-(500X100)	2438 / 3000 x 500 x 100	506 x 11	92	2.0
SCT/T-(550X100)	2438 / 3000 x 550 x 100	556 x 11	92	2.0
SCT/T-(600X100)	2438 / 3000 x 600 x 100	606 x 11	92	2.0
SCT/T-(650X100)	2438 / 3000 x 650 x 100	656 x 11	92	2.0
SCT/T-(700X100)	2438 / 3000 x 700 x 100	706 x 11	92	2.0
SCT/T-(750X100)	2438 / 3000 x 750 x 100	756 x 11	92	2.0
SCT/T-(800X100)	2438 / 3000 x 800 x 100	806 x 11	92	2.0
SCT/T-(850X100)	2438 / 3000 x 850 x 100	856 x 11	92	2.0
SCT/T-(900X100)	2438 / 3000 x 900 x 100	906 x 11	92	2.0
SCT/T-(950X100)	2438 / 3000 x 950 x 100	956 x 11	92	2.0
SCT/T-(1000X100)	2438 / 3000 x 1000 x 100	1006 x 11	92	2.0

**Specification subject to change without prior notice.
***Thickness Tolerance with + - 10%

*For order information, please refer page 63.

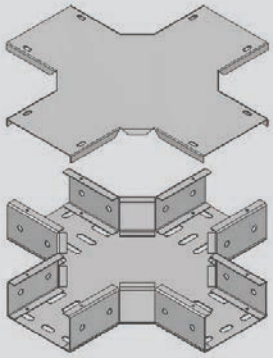

◄ Flatwise Cross
SCT/T (90D) AC-1

Flatwise Tee ►
SCT/T (90D) AC-2

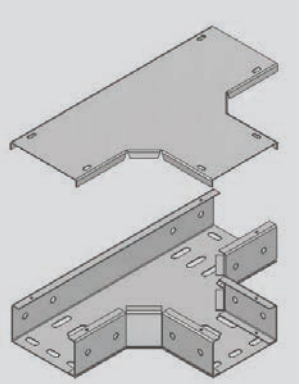

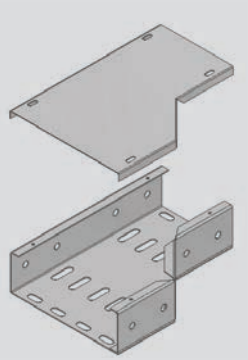

◄ Righthand Reducer
SCT/T AC-3

Lefthand Reducer ►
SCT/T AC-4

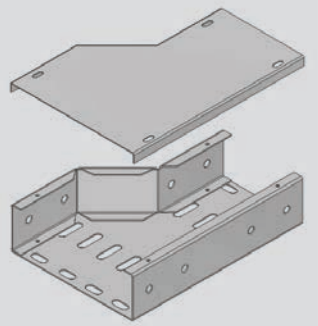

**Other design and sizes are available upon request.

"Type T"

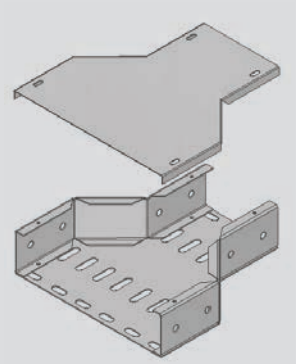

◄ **Straight Reducer**
SCT/T AC-5

Flatwise Elbow ►
SCT/T (90D) AC-6

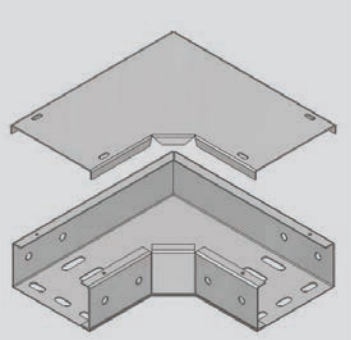

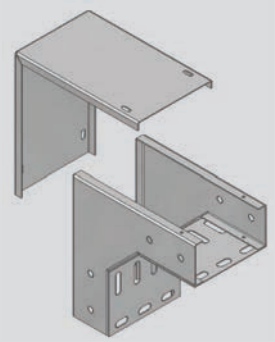

◄ **Edgewise Elbow Left**
SCT/T AC-7

Edgewise Elbow Right ►
SCT/T (90D) AC-8

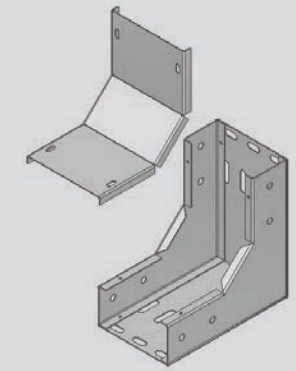

"Type T"

**Other design and sizes are available upon request.