T8 FLUORESCENT LAMPHOLDER - 6 SERIES

S634

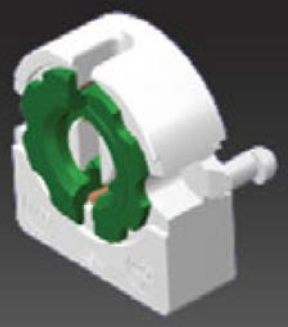

G13
2A/500V
T110
5G
2500PCS

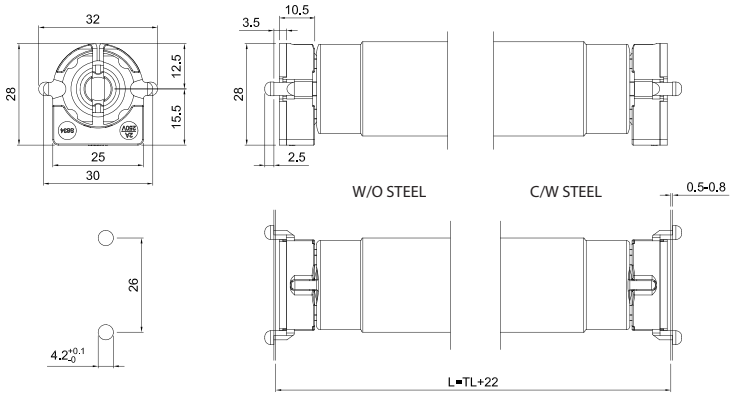

IP20 LAMPHOLDER

- Polycarbonate body & PBT Rotor
- Max. permissible temperature T110°C at the rear and front portion of the lampholders.

S635

G13
2A/500V
T110
5G
2000PCS

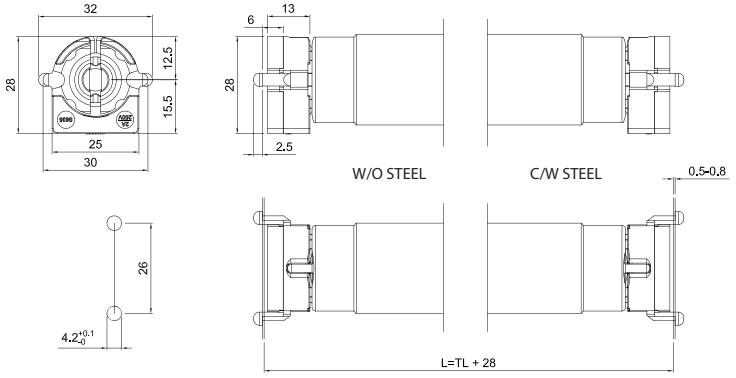

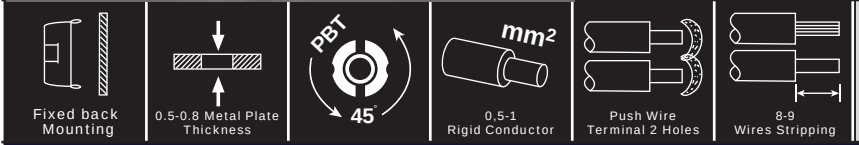

IP20 LAMPHOLDER

- Polycarbonate body & PBT Rotor
- Max. permissible temperature T110°C at the rear and front portion of the lampholders.

SIRIJAYA
INDUSTRIES SDN. BHD.

No.9 Lebuh Perusahaan Klebang 9, IGB International Industrial Park, 31200 Chemor, Perak Darul Ridzuan, Malaysia.
Tel: +605- 292 3888 (Hunting Line) 291 2223 - 291 2228 Fax +605-291 2221, 291 2222 www.sirijaya.com